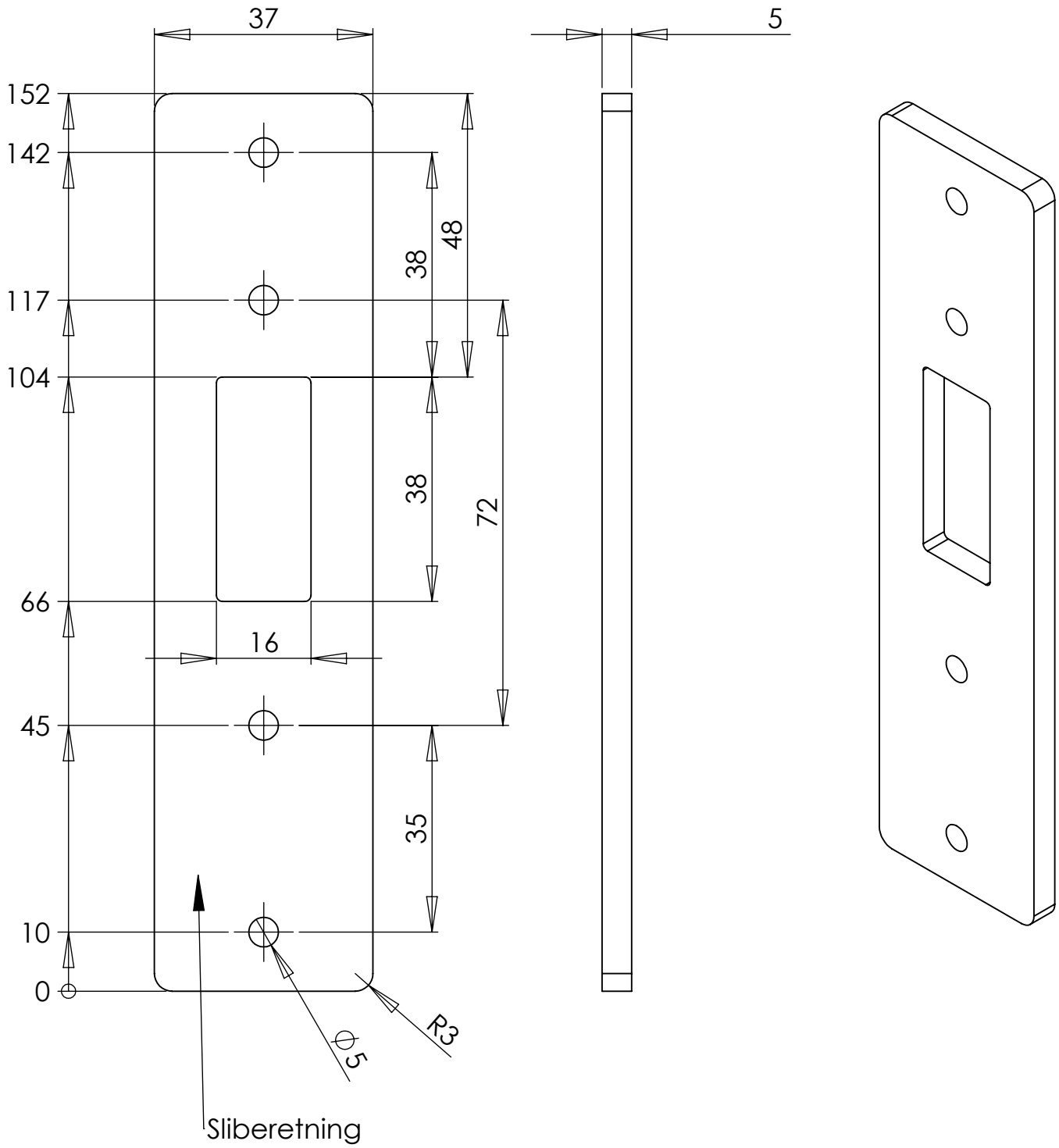

5MM. RUSTFRI STÅL
OVERFLADE: SLEBET PÅ LANGS, EN SIDE
KANTER: SLEBET

SLUTBLIK
Hjulmagervej 13, 9490 Pandrup
Tlf. +45 21 25 75 15
cv@maxars.com
maxars.com
slutblik.dk

This document has been prepared by Maxars A/S, Pandrup Denmark, and remains the property of the company.
Reproduction or use of this document without the consent of Maxars A/S or its subsidiaries is prohibited. All rights reserved.

Dim. tolerance:	Scale:	Sheet:	Size:
DS/ISO 2768-1 m	1:1	1/1	A4

Material:
AISI 304

	Sign	Date
Constr.	HCT	25-10-2019
Last saved	HCT	25-10-2019

WEIGHT. 197.22

SLUTBLIK - 37 X 152 X 5

Drawing no.
MA-033-5